# Chapter 6

# Manipulator Dynamics

# Overview

In this chapter the dynamics of serial manipulators will be introduced following two formulations:

- Introduction to Inverse and Forwards Dynamic Problems
- Mass Distribution and Inertia Properties
- Acceleration of a Rigid Body
- Dynamic Formulations
  - Newton-Euler Formulation
  - Lagrange Formulation

# Inverse and Forward Dynamic Problems

In this chapter, we consider the forces/torques that are required to cause motion.

The general dynamic equation of articulated bodies is given by

$$\boldsymbol{Q} = \boldsymbol{M}(\boldsymbol{\Theta})\ddot{\boldsymbol{\Theta}} + \boldsymbol{V}\left(\boldsymbol{\Theta}, \dot{\boldsymbol{\Theta}}\right) + \boldsymbol{G}(\boldsymbol{\Theta})$$

where

$\boldsymbol{M}(\boldsymbol{\Theta})$ is the mass matrix, a function of the joint displacement, $\boldsymbol{\Theta}$,

$\ddot{\boldsymbol{\Theta}}$ is the vector of joint accelerations,

$\boldsymbol{V}\left(\boldsymbol{\Theta}, \dot{\boldsymbol{\Theta}}\right)$ is the velocity coupling vector, a function of $\boldsymbol{\Theta}$ and $\dot{\boldsymbol{\Theta}}$, (centrifugal and Coriolis terms)

$\boldsymbol{G}(\boldsymbol{\Theta})$ is the gravitational vector, a function of $\boldsymbol{\Theta}$, and

$\boldsymbol{Q} = \boldsymbol{\tau} - \boldsymbol{J}^{\mathrm{T}}\boldsymbol{F} - \boldsymbol{f}_{\boldsymbol{r}}$ is the generalized force vector, which includes:

actuator's torque/force vector,

external forces and friction.

# Inverse and Forward Dynamic Problems – The State-space Equation

Let us consider that there are no external forces or friction.

$$\boldsymbol{\tau} = \boldsymbol{M}(\boldsymbol{\Theta})\ddot{\boldsymbol{\Theta}} + \boldsymbol{V}\left(\boldsymbol{\Theta}, \dot{\boldsymbol{\Theta}}\right) + \boldsymbol{G}(\boldsymbol{\Theta}) \tag{1}$$

Similar to all the Kinematic Problems, the dynamic problem of manipulators is divided into Inverse and Forward Dynamics.

**Inverse Dynamics** – Given a set of joint displacements ($\boldsymbol{\Theta}$), joint rates ($\dot{\boldsymbol{\Theta}}$) and joint accelerations ($\ddot{\boldsymbol{\Theta}}$), determine the required joint torques/forces ($\boldsymbol{\tau}$) that are required through the actuators to produce such motion. Eq. (1) is a linear equation.

**Forward Dynamics** – Given a set of joint torques/forces ($\boldsymbol{\tau}$), determine the motion of the manipulator ($\boldsymbol{\Theta}$, $\dot{\boldsymbol{\Theta}}$, $\ddot{\boldsymbol{\Theta}}$). Eq. (1) is a differential equation.

# Inverse and Forward Dynamic Problems – The State-space Equation

The high-level block diagram of the manipulator is shown below

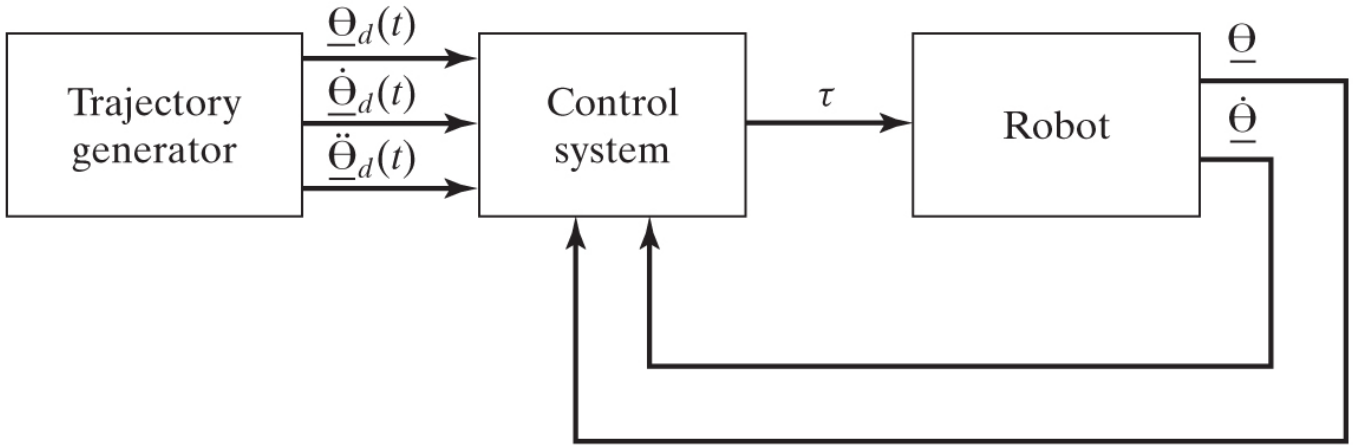


**Inverse Kinematics** is used for controlling the manipulator, i.e., the torque is controlled to provide a desired motion.

$$\boldsymbol{\tau} = \boldsymbol{M}(\boldsymbol{\Theta_d})\ddot{\boldsymbol{\Theta}}_{\boldsymbol{d}} + \boldsymbol{V}\left(\boldsymbol{\Theta_d}, \dot{\boldsymbol{\Theta}}_d\right) + \boldsymbol{G}(\boldsymbol{\Theta_d})$$

**Forward Kinematics** is used for simulating the motion of the manipulator. Simulation replaces the Robot block.

# Mass Distribution

Dynamics requires the mass and the inertia properties of the link.

**Mass** – The mass is a measure of the resistance of a body to linear acceleration. Similarly, if a force acts on a body, the body will accelerate. The ratio between the force and the resulting acceleration is the inertia (or mass) of the body.

$$\boldsymbol{F} = m\boldsymbol{a}$$

**Rotational Inertia** – Rotational inertia is a measure of the resistance of a body to angular acceleration. Similarly, if a torque acts on a body, the body will undergo an angular acceleration. The ratio between the torque and the angular acceleration is the rotational inertia of the body, which depends on its mass and its distribution about the axis of rotation.

$$\boldsymbol{M} = \boldsymbol{I}\boldsymbol{\alpha} + \boldsymbol{\omega} \times \boldsymbol{I}\boldsymbol{\omega}$$

# Mass Distribution

Inertia properties of common shapes can be found in the covers of many textbooks.

**CENTROIDAL INERTIA PROPERTIES***

**Slender bar**

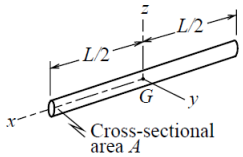


$$m = \rho A L,$$

$$I_{xx} \approx 0, \quad I_{yy} = I_{zz} = \frac{1}{12} m L^2.$$

**Cylinder**

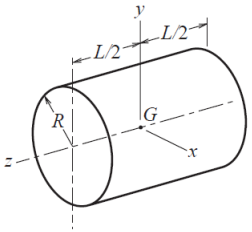


$$m = \pi \rho R^2 L,$$

$$I_{xx} = I_{yy} = \frac{1}{12} m \left(3R^2 + L^2\right), \quad I_{zz} = \frac{1}{2} m R^2.$$

* Products of inertia that are not listed are zero.

**Semicylinder**

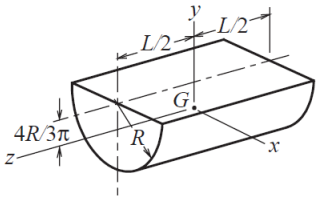


$$m = \frac{1}{2} \pi \rho R^2 L,$$

$$I_{xx} = \left(\frac{1}{4} - \frac{16}{9\pi^2}\right) m R^2 + \frac{1}{12} m L^2,$$

$$I_{yy} = \frac{m}{12}\left(3R^2 + L^2\right), \quad I_{zz} = \left(\frac{1}{2} - \frac{16}{9\pi^2}\right) m R^2.$$

**Rectangular parallelepiped**

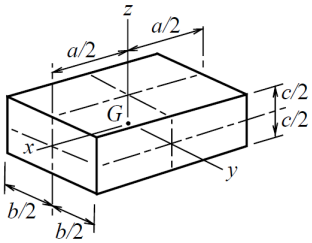


$$m = \rho a b c,$$

$$I_{xx} = \frac{1}{12} m \left(b^2 + c^2\right), \quad I_{yy} = \frac{1}{12} m \left(a^2 + c^2\right), \quad I_{zz} = \frac{1}{12} m \left(a^2 + b^2\right).$$

**Thin disk ($h \ll R$)**

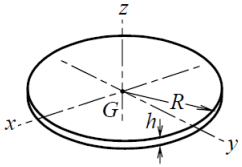


$$m = \pi \rho R^2 h,$$

$$I_{xx} = I_{yy} = \frac{1}{4} m R^2, \quad I_{zz} = \frac{1}{2} m R^2.$$

**Sphere**

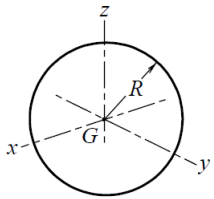


$$m = \frac{4}{3} \pi \rho R^3,$$

$$I_{xx} = I_{yy} = I_{zz} = \frac{2}{5} m R^2.$$

# Mass Distribution

The previous bodies have zero products of inertia ($I_{xy}, I_{xz}, I_{yz}$), because the bodies are described with respect to axes that form planes of symmetry (principal axes). Thus, only moments of inertia ($I_{xx}, I_{yy}, I_{zz}$), are non-zero.

All the inertia properties (*moments* and *products of inertia*) can be written in a matrix, known as the **inertia tensor**, that has the following form

$$ {}^{A}\boldsymbol{I} = \begin{bmatrix} I_{xx} & -I_{xy} & -I_{xz} \\ -I_{xy} & I_{yy} & -I_{yz} \\ -I_{xz} & -I_{yz} & I_{zz} \end{bmatrix} $$

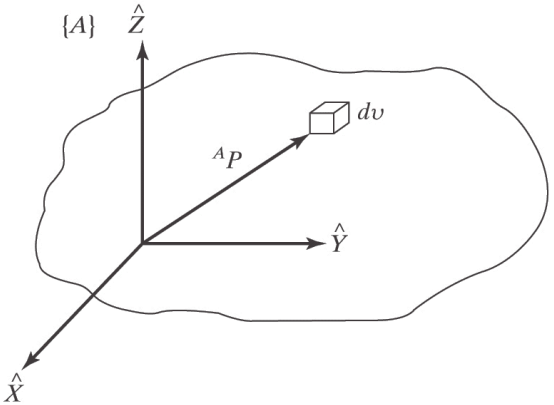


where $A$ is the reference frame in which the inertia tensor is being described.

$$ I_{xx} = \iiint_V (y^2 + z^2)\rho dv \qquad I_{xy} = \iiint_V xy\rho dv $$

$$ I_{yy} = \iiint_V (x^2 + z^2)\rho dv \qquad I_{xz} = \iiint_V xz\rho dv $$

$$ I_{zz} = \iiint_V (x^2 + y^2)\rho dv \qquad I_{yz} = \iiint_V yz\rho dv $$

# Mass Distribution

**Example**: Find the inertia tensor for the rectangular body of uniform density $\rho$ with respect to the coordinate system shown.

$$I_{xx} = \int_0^h \int_0^l \int_0^w (y^2 + z^2)\rho \, dx \, dy \, dz$$

$$= \int_0^h \int_0^l (y^2 + z^2)\rho \, w \, dy \, dz$$

$$= \int_0^h \left(\frac{l^3}{3} + z^2 l\right) \rho \, w \, dz$$

$$= \left(\frac{hl^3w}{3} + \frac{h^3lw}{3}\right)\rho = \frac{m}{3}(l^2 + h^2)$$

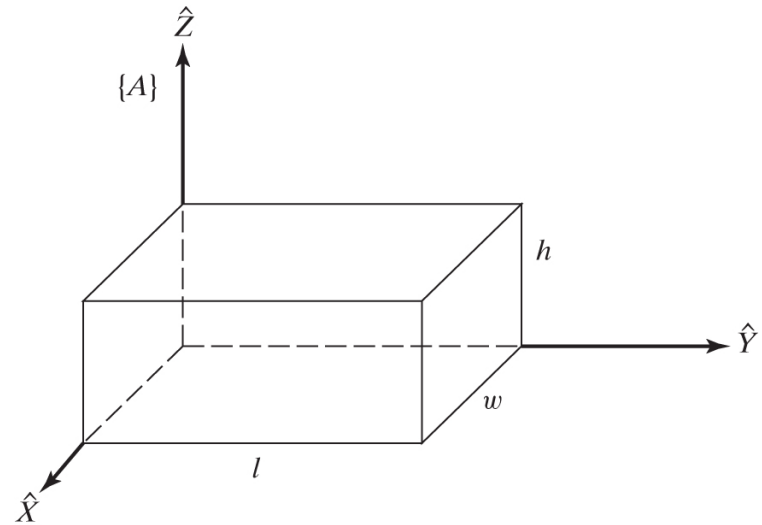


Similarly, $I_{yy}$ and $I_{zz}$ can be found as

$$I_{yy} = \frac{m}{3}(w^2 + h^2)$$

$$I_{zz} = \frac{m}{3}(l^2 + w^2)$$

**Example**: cont'd

$$I_{xy} = \int_0^h \int_0^l \int_0^w xy\,\rho\,dx\,dy\,dz$$

$$= \int_0^h \int_0^l \frac{w^2}{2} y\,w\,dy\,dz$$

$$= \int_0^h \frac{w^2 l^2}{4} \rho\,dz$$

$$= \frac{m}{4} wl$$

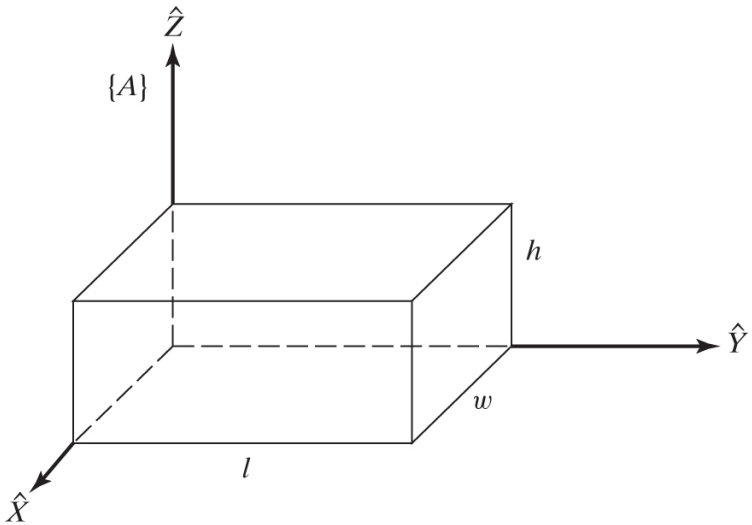


Similarly, $I_{xz}$ and $I_{yz}$ can be found as

$$I_{xz} = \frac{m}{4} wh$$

$$I_{yz} = \frac{m}{4} hl$$

**Example**: cont'd

Hence the inertia tensor for this object becomes

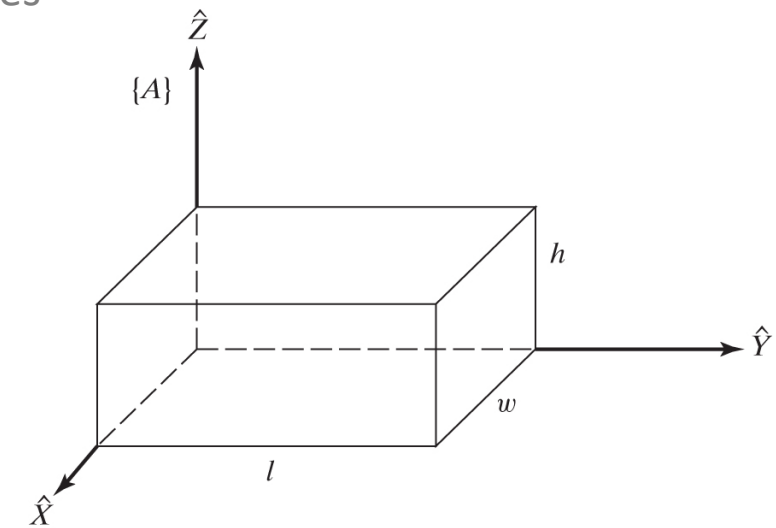


$$
{}^{A}\boldsymbol{I} = \begin{bmatrix} \frac{m}{3}(l^2+h^2) & -\frac{m}{4}wl & -\frac{m}{4}wh \\ -\frac{m}{4}wl & \frac{m}{3}(w^2+h^2) & -\frac{m}{4}hl \\ -\frac{m}{4}wh & -\frac{m}{4}hl & \frac{m}{3}(l^2+w^2) \end{bmatrix}
$$

# Mass Distribution – Parallel Axis Theorem

In general, inertial tensors are described with respect to a frame attached to the centroid of the body; however, sometimes it is necessary to describe the inertia tensor with respect to another reference frame.

The translation of the moments and products of inertia to another reference frame is accomplished with the **Parallel Axis Theorem**.

<u>Moment of Inertia</u>

$$^{C}I_{xx} = {}^{A}I_{xx} + m(z_C^2 + y_C^2)$$

$$^{C}I_{yy} = {}^{A}I_{yy} + m(x_C^2 + z_C^2)$$

$$^{C}I_{zz} = {}^{A}I_{zz} + m(x_C^2 + y_C^2)$$

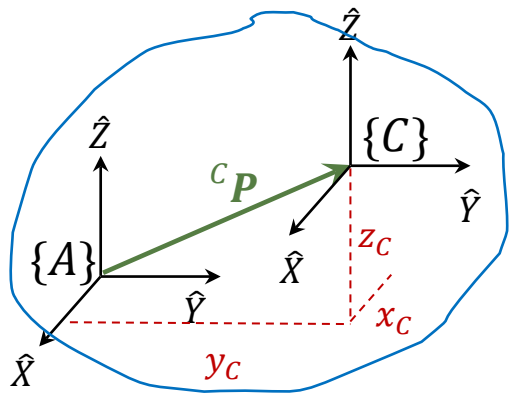


<u>Products of Inertia</u>

$$^{C}I_{xy} = {}^{A}I_{xy} - m\, x_C y_C$$

$$^{C}I_{yz} = {}^{A}I_{yz} - m\, y_C z_C$$

$$^{C}I_{xz} = {}^{A}I_{xz} - m\, x_C z_C$$

# Mass Distribution – Rotation Transformation

In case the two frames are not oriented in the same manner, we have to apply the **Rotation Transformation** of the inertia properties.

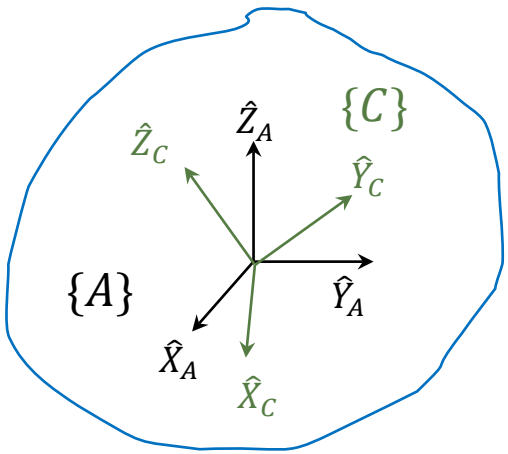


$$^{C}\boldsymbol{I} = {}^{C}_{A}\boldsymbol{R}\ {}^{A}\boldsymbol{I}\ {}^{C}_{A}\boldsymbol{R}^{\top}$$

# Acceleration of Rigid Body

In pervious chapters, we studied the velocity of a rigid body and defined that the absolute velocity of a rigid body in space can be found as the time derivative of the position vector. The linear acceleration is the second derivative;

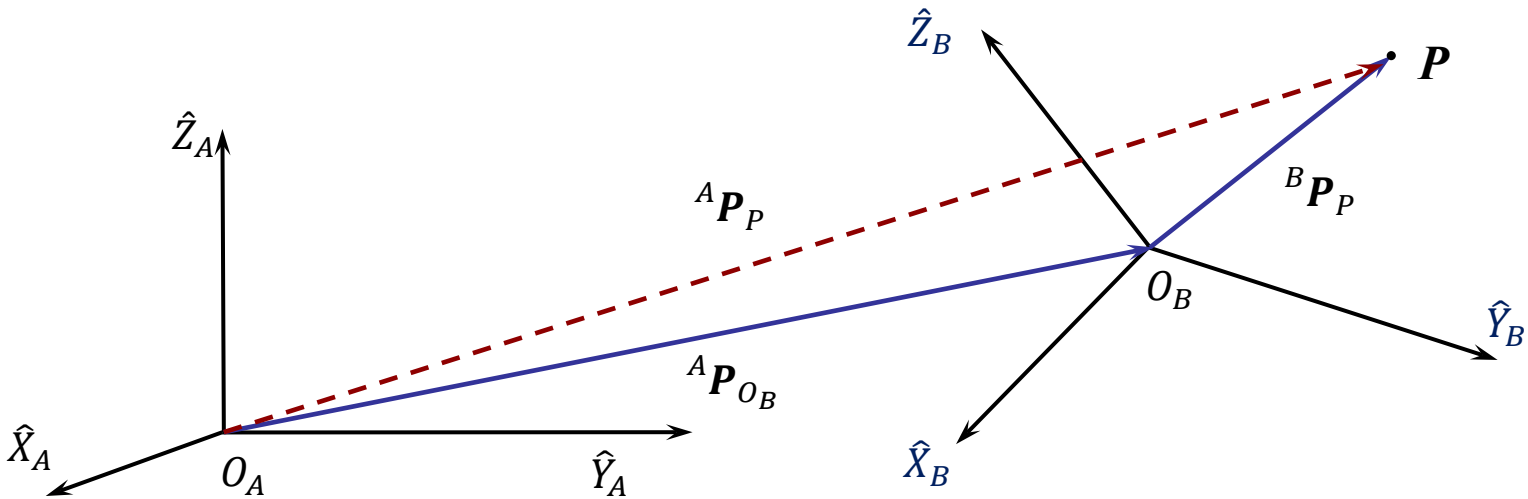


$$ {}^{A}\boldsymbol{P}_P = {}^{A}\boldsymbol{P}_{O_B} + {}^{A}_{B}\boldsymbol{R}\ {}^{B}\boldsymbol{P}_P $$

$$ {}^{A}\boldsymbol{V}_P = {}^{A}\boldsymbol{V}_{O_B} + {}^{A}_{B}\boldsymbol{R}\ {}^{B}\boldsymbol{V}_P + {}^{A}\boldsymbol{\Omega}_B \times {}^{A}_{B}\boldsymbol{R}\ {}^{B}\boldsymbol{P}_P $$

$$ {}^{A}\boldsymbol{a}_P = {}^{A}\boldsymbol{a}_{O_B} + {}^{A}_{B}\boldsymbol{R}\ {}^{B}\boldsymbol{a}_P + 2\,{}^{A}\boldsymbol{\Omega}_B \times {}^{A}_{B}\boldsymbol{R}\ {}^{B}\boldsymbol{V}_P + {}^{A}\dot{\boldsymbol{\Omega}}_B \times {}^{A}_{B}\boldsymbol{R}\ {}^{B}\boldsymbol{P}_P + {}^{A}\boldsymbol{\Omega}_B \times ({}^{A}\boldsymbol{\Omega}_B \times {}^{A}_{B}\boldsymbol{R}\ {}^{B}\boldsymbol{P}_P) $$

Absolute acceleration of point $P$ — Absolute acceleration of point $O_B$ — Sliding acceleration — Coriolis acceleration — Tangential acceleration — Centripetal acceleration

# Acceleration of Rigid Body

For the angular velocity, consider the case that frame $\{B\}$ is rotating relative to $\{A\}$ with and angular velocity ${}^{A}\boldsymbol{\Omega}_{B}$ and frame $\{C\}$ is rotating relative to $\{B\}$ with ${}^{B}\boldsymbol{\Omega}_{C}$. To calculate ${}^{A}\boldsymbol{\Omega}_{C}$, we add the angular velocities relative to frame $\{A\}$.

$$ {}^{A}\boldsymbol{\Omega}_{C} = {}^{A}\boldsymbol{\Omega}_{B} + {}^{A}_{B}\boldsymbol{R}\,{}^{B}\boldsymbol{\Omega}_{C} $$

The angular acceleration is determined by taking the time derivative of this equation

$$ {}^{A}\dot{\boldsymbol{\Omega}}_{C} = {}^{A}\dot{\boldsymbol{\Omega}}_{B} + {}^{A}_{B}\boldsymbol{R}\,{}^{B}\dot{\boldsymbol{\Omega}}_{C} + {}^{A}\boldsymbol{\Omega}_{B} \times {}^{A}_{B}\boldsymbol{R}\,{}^{B}\boldsymbol{\Omega}_{C} $$

# Newton's Equation – Euler's Equation

## Newton's Equation

The desired linear acceleration ($\dot{\boldsymbol{v}}_G$) of the link with mass $m$ is caused by force $\boldsymbol{N}$,

$$\boldsymbol{F} = m\,\dot{\boldsymbol{v}}_G$$

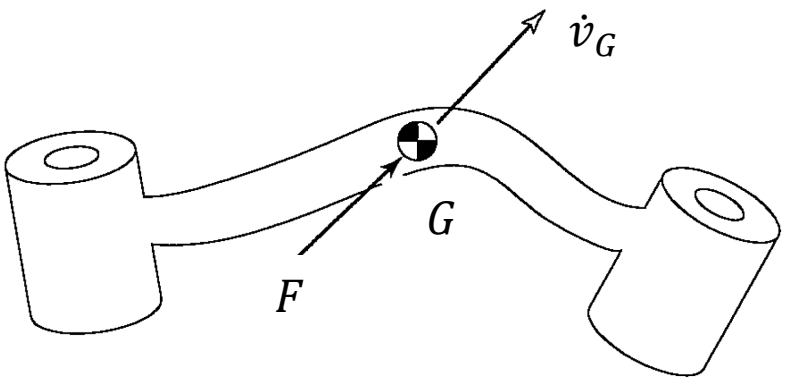


## Euler's Equation

The desired angular acceleration of a rigid body is caused by an inertial moment

$$\boldsymbol{N} = {}^{G}\boldsymbol{I}\,\dot{\boldsymbol{\omega}} + \boldsymbol{\omega} \times {}^{G}\boldsymbol{I}\boldsymbol{\omega}$$

Where, ${}^{G}\boldsymbol{I}$ is the inertia tensor written in terms of frame $\{G\}$, $\boldsymbol{\omega}$ and $\dot{\boldsymbol{\omega}}$ are the angular velocity and angular acceleration respectively, and $\boldsymbol{N}$ represents moment.

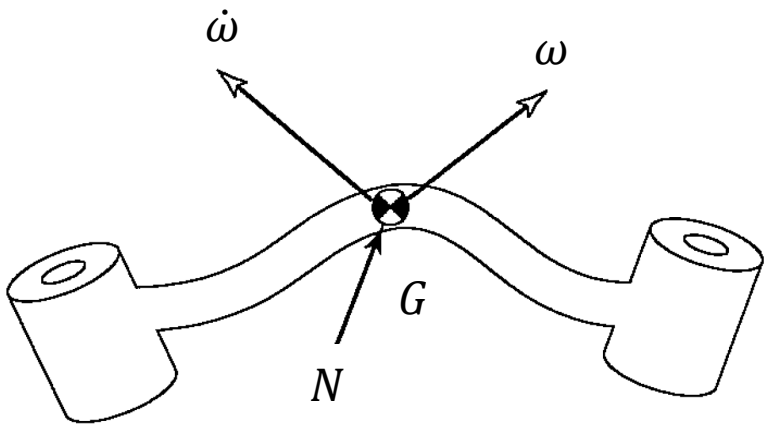

# Iterative Newton – Euler Dynamic Formulation

The Newton-Euler formulation is a recursive iteration process.

The velocity and acceleration of the links are determined based on their propagation along the manipulator (base to end-effector)

Then, a balance of forces (Newton) and moments (Euler) is performed at each link. Note that an actuator must apply a force/torque to balance forces that act on links that follow the joints (end-effector to base)

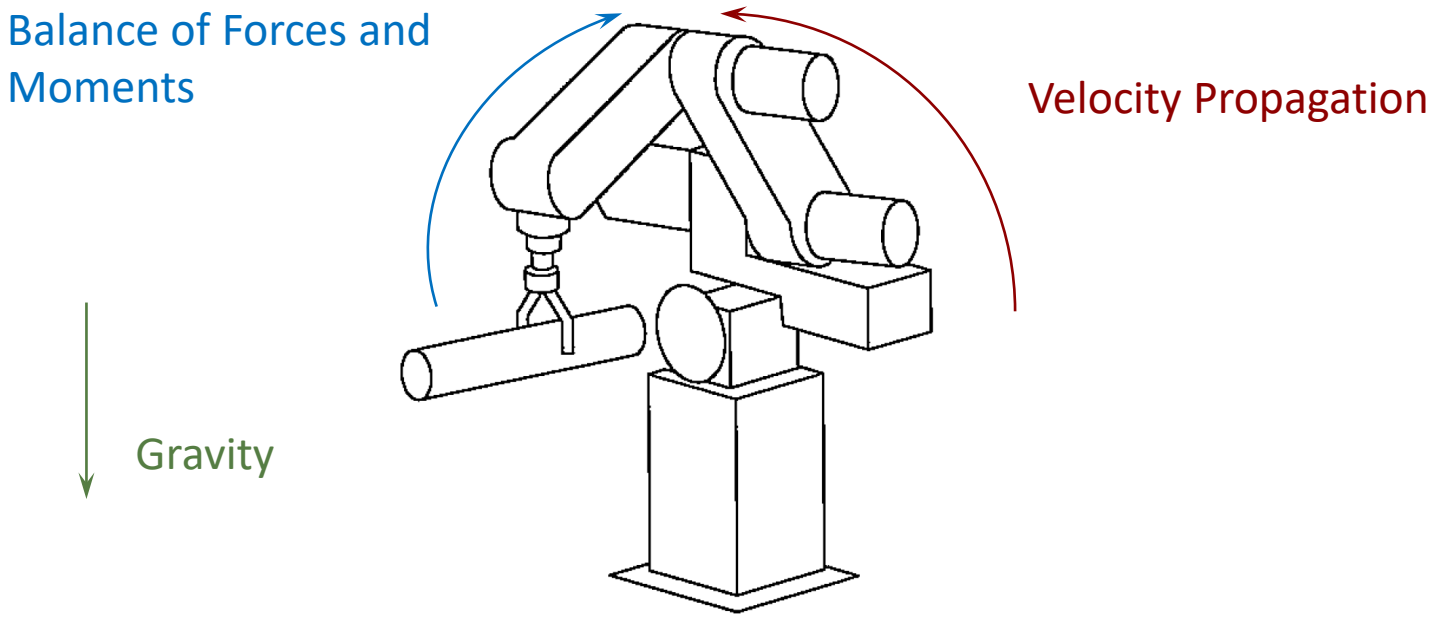

# Iterative Newton – Euler Dynamic Formulation

## Outward Iteration

Compute the angular velocity, angular acceleration, linear velocity, linear acceleration and the inertial forces and moments of each link in terms of its preceding link. This process is repeated from $i = 0$ to $i = n - 1$, where $n$ is the number of joints.

Set the initial velocity and acceleration values to zero, except for the acceleration of the base which will incorporate gravity.

## Inward Iteration

Perform the balance of forces and moments about the joints. This process is repeated from $i = n$ to $i = 1$, where $n$ is the number of joints.

Set the initial force and moment at $i = n$ (frame $n + 1$) be the external forces and moments being applied to the end-effector.

# Outward Iterations to Compute Velocities and Accelerations

This iteration starts with link frame $\{1\}$ and moves successively link by link until link frame $\{n\}$, $i = 0 \rightarrow n-1$.

- Angular Velocity
  - revolute joint $\quad {}^{i+1}\boldsymbol{\omega}_{i+1} = {}^{i+1}_{i}\boldsymbol{R}\ {}^{i}\omega_i + \dot{\theta}_{i+1}\,{}^{i+1}\hat{Z}_{i+1}$
  - prismatic joint $\quad {}^{i+1}\boldsymbol{\omega}_{i+1} = {}^{i+1}_{i}\boldsymbol{R}\ {}^{i}\boldsymbol{\omega}_i$

- Angular Acceleration
  - revolute joint $\quad {}^{i+1}\dot{\boldsymbol{\omega}}_{i+1} = {}^{i+1}_{i}\boldsymbol{R}\ {}^{i}\dot{\boldsymbol{\omega}}_i + {}^{i+1}_{i}\boldsymbol{R}\ {}^{i}\boldsymbol{\omega}_i \times \dot{\theta}_{i+1}\,{}^{i+1}\hat{Z}_{i+1} + \ddot{\theta}_{i+1}\,{}^{i+1}\hat{Z}_{i+1}$
  - prismatic joint $\quad {}^{i+1}\dot{\boldsymbol{\omega}}_{i+1} = {}^{i+1}_{i}\boldsymbol{R}\ {}^{i}\dot{\boldsymbol{\omega}}_i$

# Outward Iterations to Compute Velocities and Accelerations

- Linear Acceleration
  - revolute joint $\quad {}^{i+1}\dot{\boldsymbol{v}}_{i+1} = {}^{i+1}_{i}\boldsymbol{R}\left( {}^{i}\dot{\boldsymbol{\omega}}_i \times {}^{i}\boldsymbol{P}_{i+1} + {}^{i}\boldsymbol{\omega}_i \times \left( {}^{i}\boldsymbol{\omega}_i \times {}^{i}\boldsymbol{P}_{i+1}\right) + {}^{i}\dot{\boldsymbol{v}}_i\right)$
  - prismatic joint $\quad {}^{i+1}\dot{\boldsymbol{v}}_{i+1} = {}^{i+1}_{i}\boldsymbol{R}\left( {}^{i}\dot{\boldsymbol{\omega}}_i \times {}^{i}\boldsymbol{P}_{i+1} + {}^{i}\boldsymbol{\omega}_i \times \left( {}^{i}\boldsymbol{\omega}_i \times {}^{i}\boldsymbol{P}_{i+1}\right) + {}^{i}\dot{\boldsymbol{v}}_i\right)$

$$+ 2\,{}^{i+1}\boldsymbol{\omega}_{i+1} \times \dot{d}_{i+1}\,{}^{i+1}\hat{Z}_{i+1} + \ddot{d}_{i+1}\,{}^{i+1}\hat{Z}_{i+1}$$

- Linear Acceleration of the Center of Mass
  - either joint $\quad {}^{i}\dot{\boldsymbol{v}}_{G_i} = {}^{i}\dot{\boldsymbol{\omega}}_i \times {}^{i}\boldsymbol{P}_{G_i} + {}^{i}\boldsymbol{\omega}_i \times \left( {}^{i}\boldsymbol{\omega}_i \times {}^{i}\boldsymbol{P}_{G_i}\right) + {}^{i}\dot{\boldsymbol{v}}_i$

- The force and torque acting on a link (inertial forces and moments)
  - either joint $\quad {}^{i}\boldsymbol{F}_i = m_i\,{}^{i}\dot{\boldsymbol{v}}_{G_i}$
  - either joint $\quad {}^{i}\boldsymbol{N}_i = {}^{G_i}\boldsymbol{I}_i\,{}^{i}\dot{\boldsymbol{\omega}}_{G_i} + {}^{i}\boldsymbol{\omega}_i \times {}^{G_i}\boldsymbol{I}_i\,{}^{i}\boldsymbol{\omega}_i$

# Acceleration of Rigid Body

In pervious chapters, we studied the velocity of a rigid body and defined that the absolute velocity of a rigid body in space can be found as the time derivative of the position vector. The linear acceleration is the second derivative;

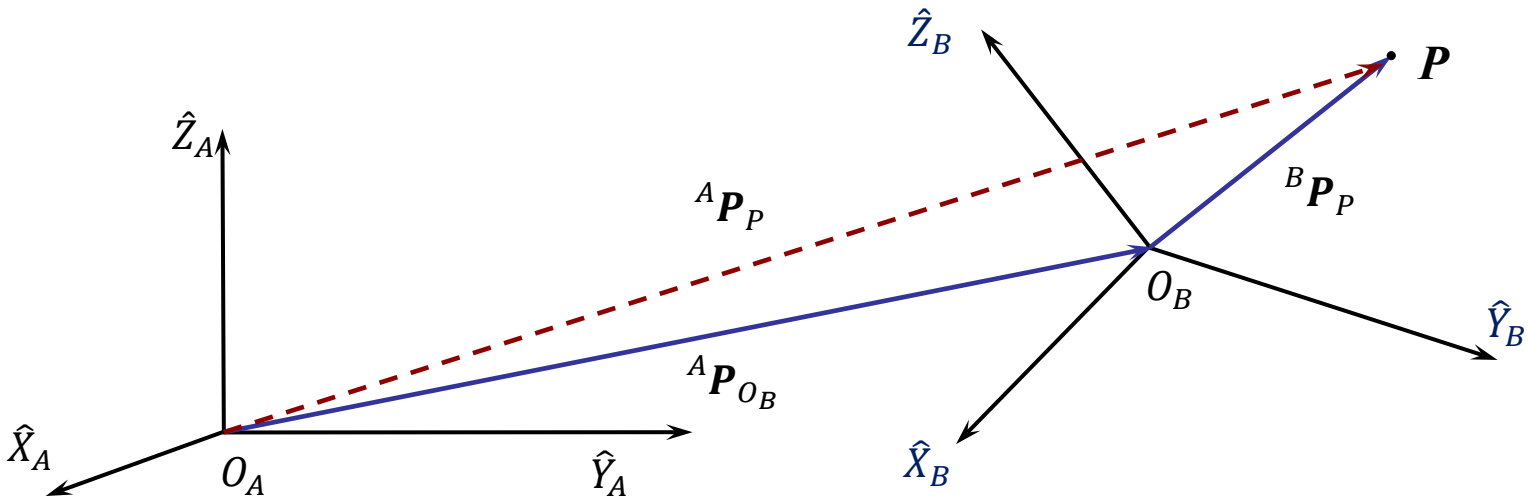


$$ {}^{A}\boldsymbol{P}_P = {}^{A}\boldsymbol{P}_{O_B} + {}^{A}_{B}\boldsymbol{R}\ {}^{B}\boldsymbol{P}_P $$

$$ {}^{A}\boldsymbol{V}_P = {}^{A}\boldsymbol{V}_{O_B} + {}^{A}_{B}\boldsymbol{R}\ {}^{B}\boldsymbol{V}_P + {}^{A}\boldsymbol{\Omega}_B \times {}^{A}_{B}\boldsymbol{R}\ {}^{B}\boldsymbol{P}_P $$

$$ {}^{A}\boldsymbol{a}_P = {}^{A}\boldsymbol{a}_{O_B} + {}^{A}_{B}\boldsymbol{R}\ {}^{B}\boldsymbol{a}_P + 2\,{}^{A}\boldsymbol{\Omega}_B \times {}^{A}_{B}\boldsymbol{R}\ {}^{B}\boldsymbol{V}_P + {}^{A}\dot{\boldsymbol{\Omega}}_B \times {}^{A}_{B}\boldsymbol{R}\ {}^{B}\boldsymbol{P}_P + {}^{A}\boldsymbol{\Omega}_B \times ({}^{A}\boldsymbol{\Omega}_B \times {}^{A}_{B}\boldsymbol{R}\ {}^{B}\boldsymbol{P}_P) $$

Absolute acceleration of point $P$ — Absolute acceleration of point $O_B$ — Sliding acceleration — Coriolis acceleration — Tangential acceleration — Centripetal acceleration

# Inward Iterations to Compute Forces and Torques

Once the force and moments acting at the centre of mass of the links that cause the desired motion are found, then the joint torque or force can be evaluated with the following equations of balance

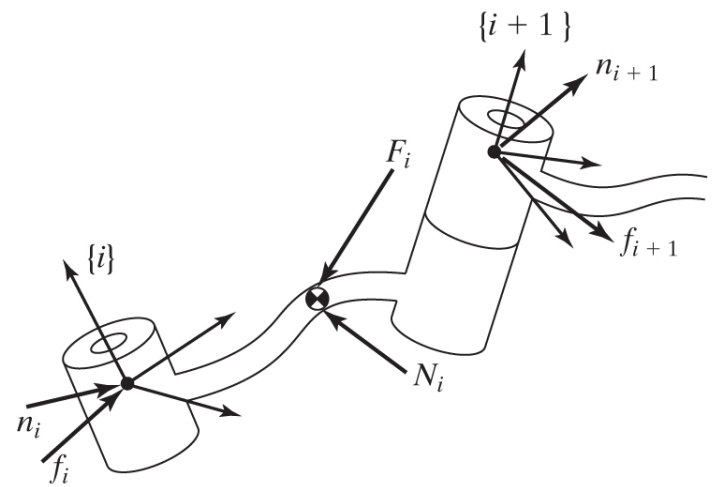


$$ {}^{i}\boldsymbol{F}_i = {}^{i}\boldsymbol{f}_i - {}_{i+1}^{i}\boldsymbol{R}\,{}^{i+1}\boldsymbol{f}_{i+1} $$

$$ {}^{i}\boldsymbol{N}_i = {}^{i}\boldsymbol{n}_i - {}^{i}\boldsymbol{n}_{i+1} + \left({}^{i}\boldsymbol{P}_{G_i}\right) \times {}^{i}\boldsymbol{f}_i + \left({}^{i}\boldsymbol{P}_{i+1} - {}^{i}\boldsymbol{P}_{G_i}\right) \times {}^{i}\boldsymbol{f}_{i+1} $$

where

$\boldsymbol{f}_i$ is the force exerted on link $i$ by link $i-1$

$\boldsymbol{n}_i$ is the torque exerted on link $i$ by link $i-1$

# Inward Iterations to Compute Forces and Torques

This iteration starts with link frame $\{n\}$ and moves successively link by link until link frame $\{1\}$, $i = n \rightarrow 1$.

The forces and moments exerted on the last link ${}^{n+1}\boldsymbol{f}_{n+1}$ and ${}^{n+1}\boldsymbol{n}_{n+1}$ are related to external forces (zero if the robot moves in free space).

- Force and moment exerted on link $i$ (reactions at joint):

either joint $$ {}^{i}\boldsymbol{f}_i = {}^{i}\boldsymbol{F}_i + {}_{i+1}^{i}\boldsymbol{R}\,{}^{i+1}\boldsymbol{f}_{i+1} $$

either joint $$ {}^{i}\boldsymbol{n}_i = {}^{i}\boldsymbol{N}_i + {}_{i+1}^{i}\boldsymbol{R}\,{}^{i+1}\boldsymbol{n}_{i+1} + {}^{i}\boldsymbol{P}_{G_i} \times {}^{i}\boldsymbol{F}_i + {}^{i}\boldsymbol{P}_{i+1} \times {}_{i+1}^{i}\boldsymbol{R}\,{}^{i+1}\boldsymbol{f}_{i+1} $$

- Required torques/forces are applied in the $z$-direction:

revolute joint $i$ (torque) $$ \boldsymbol{\tau}_i = {}^{i}\boldsymbol{n}_i^{\top}\ {}^{i}\hat{Z}_i $$

prismatic joint $i$ (force) $$ \boldsymbol{\tau}_i = {}^{i}\boldsymbol{f}_i^{\top}\ {}^{i}\hat{Z}_i $$

# Inclusion of Gravity Forces in the Dynamics Algorithm

The effect of gravity loading on the links can be included by setting ${}^{i=0}\dot{\boldsymbol{v}}_{i=0} = G$, where $G$ has the magnitude of gravity vector, but points in the opposite direction.

This is equivalent to saying that the based of the robot is accelerating upward with $1g$ acceleration. This fictitious upward acceleration causes the same effect o the links as gravity would → no extra computation for including gravity effect.

# Lagrangian Formulation

Whereas the Newton-Euler formulation is based on a “force-balance” approach, the Lagrangian Formulation is based on a “energy balance” approach.

The Lagrangian function $\mathcal{L}$ is defined as the difference between the kinetic and potential energy of a mechanical system

$$\mathcal{L}(\boldsymbol{q}, \dot{\boldsymbol{q}}) = k(\boldsymbol{q}, \dot{\boldsymbol{q}}) - u(\boldsymbol{q})$$

Lagrange’s equations of motion are formulated in terms of the Lagrangian function as

$$\frac{d}{dt}\left(\frac{\partial \mathcal{L}(\boldsymbol{q}, \dot{\boldsymbol{q}})}{\partial \dot{\boldsymbol{q}}}\right) - \frac{\partial \mathcal{L}(\boldsymbol{q}, \dot{\boldsymbol{q}})}{\partial \boldsymbol{q}_i} = \boldsymbol{Q}_i$$

where $\boldsymbol{Q}_i$ is a generalized force (e.g., torque, eternal force, etc.)

## Kinetic Energy

The kinetic energy of the $i$-th link in terms of the inertial reference frame can be expressed as

$$k_i = \frac{1}{2}\ {}^{0}\boldsymbol{v}_{G_i}^{\top} m_i\ {}^{0}\boldsymbol{v}_{G_i} + \frac{1}{2}\ {}^{0}\boldsymbol{\omega}_i^{\top}\ {}^{0}\boldsymbol{I}_i\ {}^{0}\boldsymbol{\omega}_i$$

where ${}^{0}\boldsymbol{I}_i$ is the inertia tensor of link $\{i\}$ referred to frame $\{0\}$. Since the ${}^{G_i}\boldsymbol{I}_i$ (described with respect to centre of mass) is known, we have to apply the rotation transformation of inertia properties

$${}^{0}\boldsymbol{I}_i = {}^{0}_{i}\boldsymbol{R}\ {}^{G_i}\boldsymbol{I}_i\ {}^{0}_{i}\boldsymbol{R}^{\top}$$

Given that the links are moving, ${}^{0}_{i}\boldsymbol{R}$ is changing and therefore the inertia ${}^{0}\boldsymbol{I}_i$ will be constantly changing.

## Kinetic Energy

The velocity of the centre of mass ${}^{0}\boldsymbol{v}_{G_i}$ and the angular velocity ${}^{0}\boldsymbol{\omega}_i$ of link $i$ can be found using the forward velocity problem

$$ {}^{0}\boldsymbol{V}_{G_i} = \begin{bmatrix} {}^{0}\boldsymbol{v}_{G_i} \\ {}^{0}\boldsymbol{\omega}_i \end{bmatrix} = {}^{0}\mathbf{J}_{G_i}\dot{\boldsymbol{q}} $$

which can also be written as

The velocity of the link is not affected by the joints that follow the link

$$ \begin{bmatrix} {}^{0}\boldsymbol{v}_{G_i} \\ {}^{0}\boldsymbol{\omega}_i \end{bmatrix} = \begin{bmatrix} {}^{0}\mathbf{J}_{V_{Gi}}^{(1)} & {}^{0}\mathbf{J}_{V_{Gi}}^{(2)} & \cdots & {}^{0}\mathbf{J}_{V_{Gi}}^{(i)} & \mathbf{0} & \cdots & \mathbf{0} \\ {}^{0}\mathbf{J}_{\omega_i}^{(1)} & {}^{0}\mathbf{J}_{\omega_i}^{(2)} & \cdots & {}^{0}\mathbf{J}_{\omega_i}^{(i)} & \mathbf{0} & \cdots & \mathbf{0} \end{bmatrix} \begin{bmatrix} \dot{q}_1 \\ \dot{q}_2 \\ \vdots \\ \dot{q}_i \\ \dot{q}_{i+1} \\ \vdots \\ \dot{q}_n \end{bmatrix} $$

Only the joints that precede link $i$ affect its velocity

Subscript $(i)$ indicates the column number.

## Kinetic Energy

The columns of the Jacobian are found as follows

$$
{}^{0}\mathbf{J}_{V_{Gi}}^{(i)} = \begin{cases} \underbrace{{}^{0}\hat{Z}_i \times {}^{0}\boldsymbol{P}_{i\to G_i}}_{\text{Cross Products}} & \text{Revolute Joint} \\ \text{or} & \\ \underbrace{\dfrac{\partial\, {}^{0}\boldsymbol{P}_{G_i}}{\partial \theta_i}}_{\text{Derivatives}} & \text{Revolute Joint} \\ \underbrace{{}^{0}\hat{Z}_j}_{\text{Cross Products}} & \text{Prismatic Joint} \\ \underbrace{\dfrac{\partial\, {}^{0}\boldsymbol{P}_{G_i}}{\partial d_j}}_{\text{Derivatives}} & \text{Prismatic Joint} \end{cases}
$$

$$
{}^{0}\mathbf{J}_{\omega_i}^{(i)} = \begin{cases} {}^{0}\hat{Z}_i & \text{Revolute Joint} \\ 0_{3\times 1} & \text{Prismatic Joint} \end{cases}
$$

## Kinetic Energy

Therefore, the kinematic equation of the overall system can be written in terms of Jacobians and joint rates

$$k = \frac{1}{2}\sum {}^{0}\boldsymbol{v}_{G_i}^{\top} m_i \, {}^{0}\boldsymbol{v}_{G_i} + {}^{0}\boldsymbol{\omega}_i^{\top} \, {}^{0}\boldsymbol{I}_i \, {}^{0}\boldsymbol{\omega}_i$$

$$= \frac{1}{2}\sum_{i=1}^{n} \left( {}^{0}\mathbf{J}_{V_{Gi}}\dot{\boldsymbol{q}} \right)^{\top} m_i \, {}^{0}\mathbf{J}_{V_{Gi}}\dot{\boldsymbol{q}} + \left( {}^{0}\mathbf{J}_{\omega_i}\dot{\boldsymbol{q}} \right)^{\top} {}^{0}\boldsymbol{I}_i \, {}^{0}\mathbf{J}_{\omega_i}\dot{\boldsymbol{q}}$$

$$= \frac{1}{2}\dot{\boldsymbol{q}}^{\top} \overbrace{\left( \sum_{i=1}^{n} {}^{0}\mathbf{J}_{V_{Gi}}^{\top} m_i \, {}^{0}\mathbf{J}_{V_{Gi}} + {}^{0}\mathbf{J}_{\omega_i}^{\top} \, {}^{0}\boldsymbol{I}_i \, {}^{0}\mathbf{J}_{\omega_i} \right)}^{\text{Mass Matrix (M)}} \dot{\boldsymbol{q}}$$

$$k = \frac{1}{2}\dot{\boldsymbol{q}}^{\top}\mathbf{M}\,\dot{\boldsymbol{q}}$$

$$\mathbf{M} = \sum_{i=1}^{n} {}^{0}\mathbf{J}_{V_{Gi}}^{\top} m_i \, {}^{0}\mathbf{J}_{V_{Gi}} + {}^{0}\mathbf{J}_{\omega_i}^{\top} \, {}^{0}\boldsymbol{I}_i \, {}^{0}\mathbf{J}_{\omega_i}$$

## Potential Energy

The potential energy stored in link $i$ is defined as the amount of work required to raise the centre of mass of link $i$ from a horizontal reference plane to its present position under the influence of gravity:

$$u = -\sum_{i=1}^{n} m_i \, \boldsymbol{g}^\top \; {}^0\boldsymbol{P}_{G_i}$$

## Generalized Forces

The generalized forces are those forces that act on the manipulator: torques, external forces, friction, etc.

$$\boldsymbol{Q} = \boldsymbol{\tau} - \boldsymbol{J}^\top \boldsymbol{F} - \boldsymbol{f_r}$$

## General Form of Dynamic Equation

As stated in the beginning the equation of motion is obtained from

$$\frac{d}{dt}\left(\frac{\partial \mathcal{L}(\boldsymbol{q},\dot{\boldsymbol{q}})}{\partial \dot{\boldsymbol{q}}}\right) - \frac{\partial \mathcal{L}(\boldsymbol{q},\dot{\boldsymbol{q}})}{\partial \boldsymbol{q}_i} = \boldsymbol{Q}_i \qquad \text{with} \qquad \mathcal{L}(\boldsymbol{q},\dot{\boldsymbol{q}}) = k(\boldsymbol{q},\dot{\boldsymbol{q}}) - u(\boldsymbol{q})$$

The differentiation of the Lagrangian equation yields

$$\sum_{j=1}^{n} \boldsymbol{M}_{ij}\ddot{\boldsymbol{q}}_j + \boldsymbol{V}_i + \boldsymbol{G}_i = \boldsymbol{Q}_i$$

where $\boldsymbol{M}_{ij}$ is a mass matrix element

$$\boldsymbol{V}_i = \sum_{j=1}^{n}\sum_{k=1}^{n}\left(\frac{\partial \boldsymbol{M}_{ij}}{\partial \boldsymbol{q}_k} - \frac{1}{2}\frac{\partial \boldsymbol{M}_{jk}}{\partial \boldsymbol{q}_i}\right)\dot{\boldsymbol{q}}_j\dot{\boldsymbol{q}}_k \qquad \boldsymbol{G}_i = \sum_{j=1}^{n} m_j \boldsymbol{g}^\top\, {}^0\mathbf{J}_{V_{Gi}}^{(i)}$$

Finally,

$$\boldsymbol{\tau} = \boldsymbol{M}(\boldsymbol{\Theta})\ddot{\boldsymbol{\Theta}} + \boldsymbol{V}\left(\boldsymbol{\Theta},\dot{\boldsymbol{\Theta}}\right) + \boldsymbol{G}(\boldsymbol{\Theta})$$

## Kinetic Energy (Alternative)

The kinetic energy of the $i$-th link can be expressed as

$$k_i = \frac{1}{2}\ {}^{\mathrm{i}}\boldsymbol{v}_{G_i}^{\top} m_i\ {}^{\mathrm{i}}\boldsymbol{v}_{G_i} + \frac{1}{2}\ {}^{\mathrm{i}}\boldsymbol{\omega}_i^{\top}\ {}^{G_i}\boldsymbol{I}_i\ \ {}^{\mathrm{i}}\boldsymbol{\omega}_i$$

where ${}^{G_i}\boldsymbol{I}_i$ is the inertia tensor of link $\{i\}$ with respect to centre of mass

# Let The Learning Continue